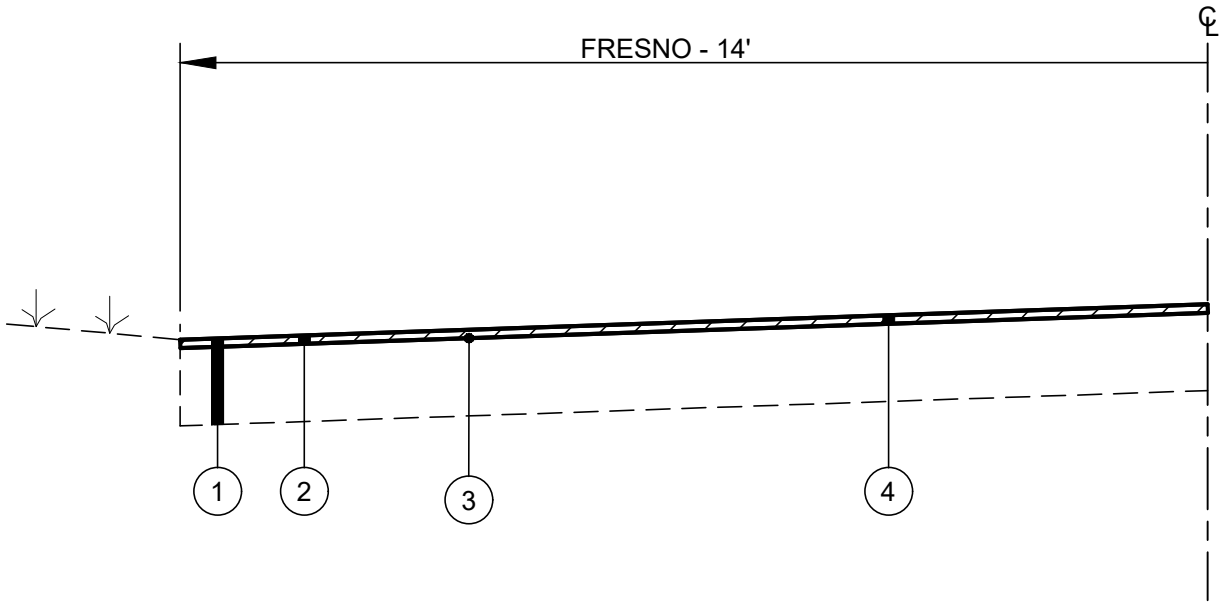

LEGEND

1. EXISTING PAVEMENT
2. ITEM 254 - PAVEMENT PLANING, ASPHALT CONCRETE - REMOVE 1 1/2"
3. ITEM SPL - TRACKLESS TACK COAT
4. ITEM 441 - ASPHALT CONCRETE SURFACE COURSE, TYPE 1, PG 64-22, (1 1/2")(448)

NOTES:

1.) ASPHALT CONCRETE PRICE ADJUSTMENTS AS NOTED IN ODOT CONSTRUCTION AND MATERIAL SPECIFICATION SECTION 401.20 WILL NOT APPLY TO THIS CONTRACT. NO ADJUSTMENTS TO UNIT PRICES WILL BE MADE DUE TO FLUCTUATIONS OF THE COST OF PETROLEUM-BASED PRODUCTS.

TYPICAL PAVEMENT SECTION

N.T.S.

BASE BID - FRESNO

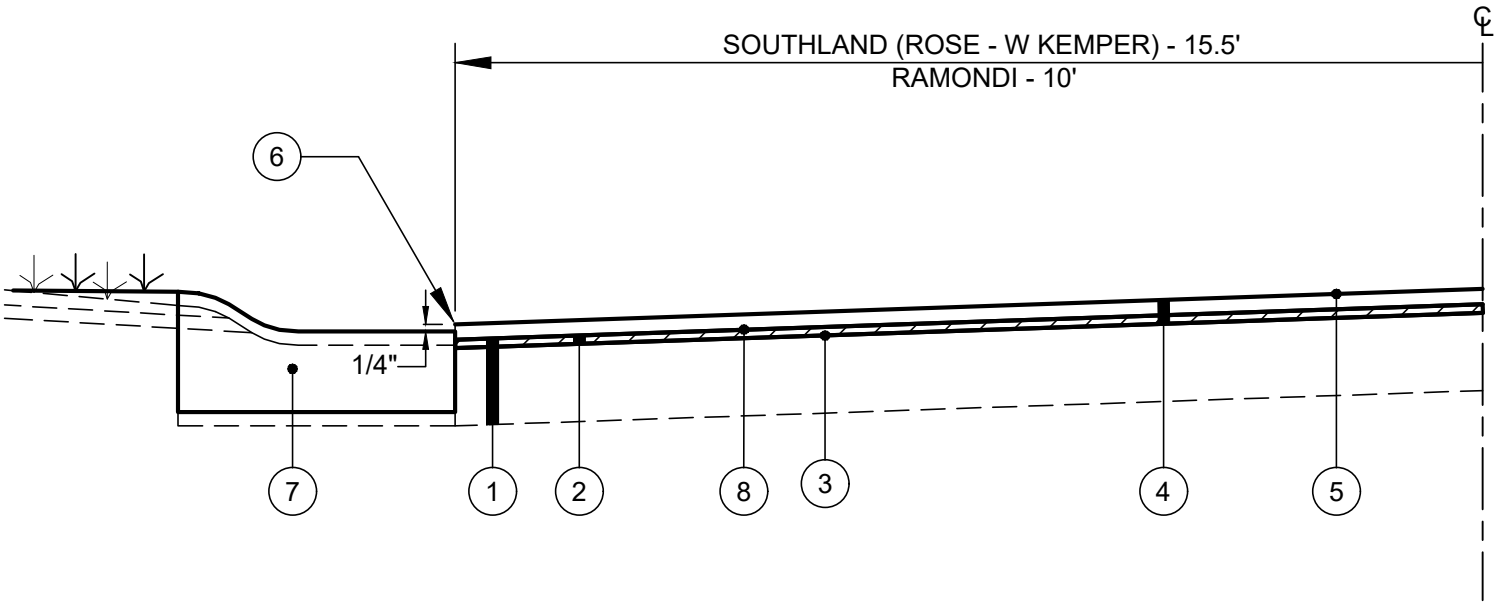

LEGEND

1. EXISTING PAVEMENT
2. ITEM 254 - PAVEMENT PLANING, ASPHALT CONCRETE - REMOVE 1 1/2"
3. ITEM SPL - ASPHALT CONCRETE, MISC. - 1/2" STRESS ABSORBING MEMBRANE INTERLAYER (SAMI), TYPE 1
4. ITEM 441 - ASPHALT CONCRETE SURFACE COURSE, TYPE 1, PG 64-22, (1 1/2")(448)
5. ITEM SPL - ASPHALT CONCRETE MISC: ASPHALT REJUVENATING AGENT
6. 4" WIDE SEAL OF HOT APPLIED RUBBERIZED JOINT SEALER WHERE ASPHALT MEETS CURB FOLLOWING THE PLACEMENT OF ITEM 448 SURFACE COURSE.
7. ITEM 609 - PROPOSED TOTAL 30" CURB REPLACEMENT, INTENT IS TO RAISE CURB APPROX. 1" HIGHER
8. ITEM SPL - TRACKLESS TACK COAT

NOTES:

1.) ASPHALT CONCRETE PRICE ADJUSTMENTS AS NOTED IN ODOT CONSTRUCTION AND MATERIAL SPECIFICATION SECTION 401.20 WILL NOT APPLY TO THIS CONTRACT. NO ADJUSTMENTS TO UNIT PRICES WILL BE MADE DUE TO FLUCTUATIONS OF THE COST OF PETROLEUM-BASED PRODUCTS.

2.) RESTORATION OF ADJACENT GRASS AREAS WITH TOPSOIL, SEEDING AND MULCHING SHALL BE INCIDENTAL TO ITEM 609. THE RESTORATION WORK IS TO BE COMPLETED WITHIN 1 WEEK OF THE COMPLETION OF THE CONSTRUCTION OF THE CURB.

TYPICAL PAVEMENT SECTION

N.T.S.

BASE BID - SOUTHLAND (ROSE - W KEMPER)
ALTERNATE #2 - RAMONDI

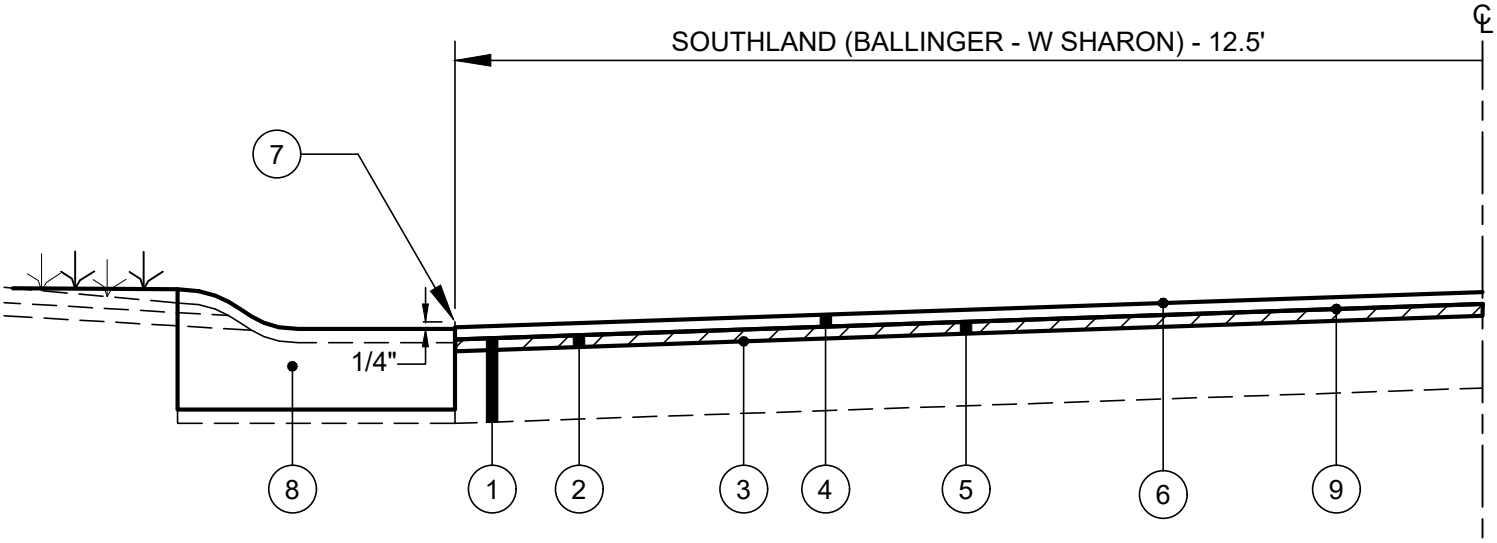

LEGEND

1. EXISTING PAVEMENT
2. ITEM 254 - PAVEMENT PLANING, ASPHALT CONCRETE - REMOVE 1 1/2"
3. ITEM SPL - ASPHALT CONCRETE, MISC. - 1/2" STRESS ABSORBING MEMBRANE INTERLAYER (SAMI), TYPE 1
4. ITEM 441 - ASPHALT CONCRETE SURFACE COURSE, TYPE 1, PG 64-22, (1 1/2")(448)
5. ITEM 441 - ASPHALT CONCRETE INTERMEDIATE COURSE, TYPE 1, PG 64-22, (1 1/2")(448)
6. ITEM SPL - ASPHALT CONCRETE MISC: ASPHALT REJUVENATING AGENT
7. 4" WIDE SEAL OF HOT APPLIED RUBBERIZED JOINT SEALER WHERE ASPHALT MEETS CURB FOLLOWING THE PLACEMENT OF ITEM 448 SURFACE COURSE.
8. ITEM 609 - PROPOSED TOTAL 30" CURB REPLACEMENT, INTENT IS TO RAISE CURB APPROX. 1" HIGHER
9. ITEM SPL - TRACKLESS TACK COAT

NOTES:

1.) ASPHALT CONCRETE PRICE ADJUSTMENTS AS NOTED IN ODOT CONSTRUCTION AND MATERIAL SPECIFICATION SECTION 401.20 WILL NOT APPLY TO THIS CONTRACT. NO ADJUSTMENTS TO UNIT PRICES WILL BE MADE DUE TO FLUCTUATIONS OF THE COST OF PETROLEUM-BASED PRODUCTS.

2.) RESTORATION OF ADJACENT GRASS AREAS WITH TOPSOIL, SEEDING AND MULCHING SHALL BE INCIDENTAL TO ITEM 609. THE RESTORATION WORK IS TO BE COMPLETED WITHIN 1 WEEK OF THE COMPLETION OF THE CONSTRUCTION OF THE CURB.

TYPICAL PAVEMENT SECTION

N.T.S.

ALTERNATE #1 - SOUTHLAND (BALLINGER - W SHARON)

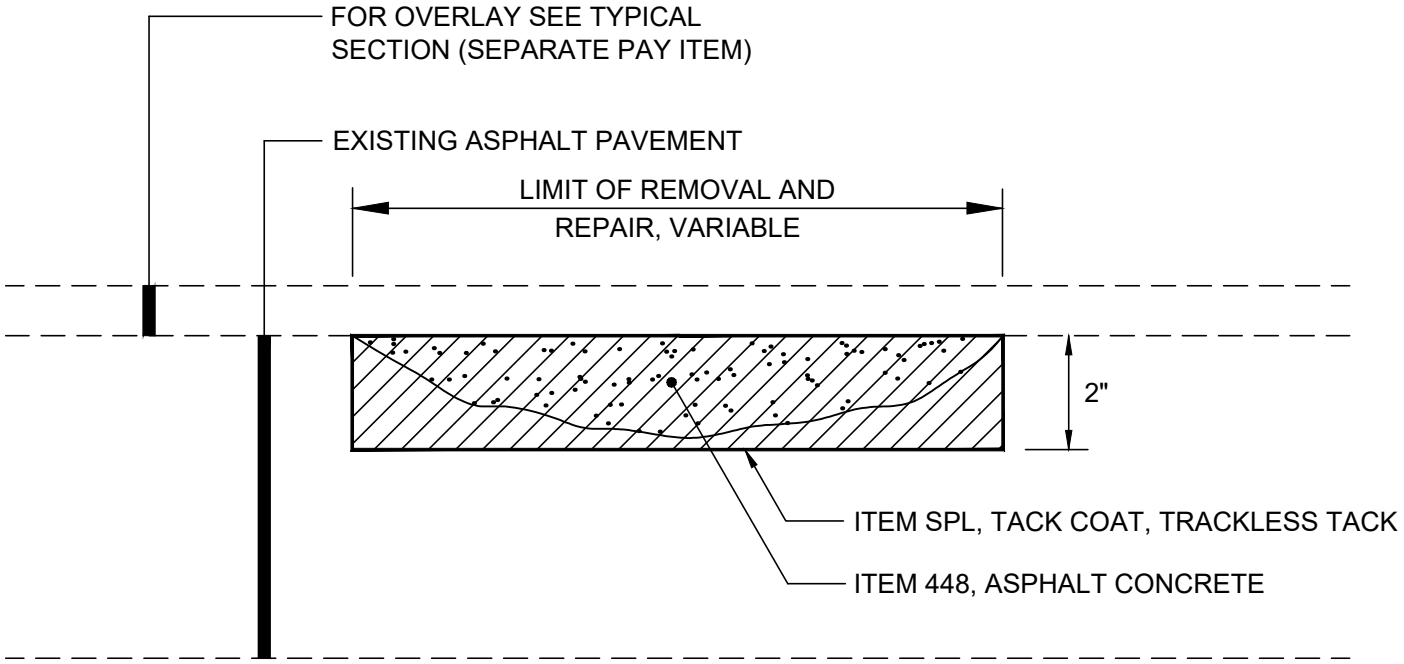

GRIND 2" EXISTING ASPHALT PAVEMENT, TACK COAT 3 SIDES
(INCLUDED IN COST OF PARTIAL DEPTH PAVEMENT REPAIR) AND
INSTALL 2" ASPHALT PAVEMENT. SEAL EDGES

NOTE:

REMOVE DETERIORATED PAVEMENT 2", SQUARING THE EDGES OF THE AREA TO BE REPAIRED. COAT THE SURFACE AREA WITH ITEM SPL, TACK COAT, TRACKLESS TACK BEFORE PLACING ITEM 448.

ITEM 251 - PARTIAL DEPTH PAVEMENT REPAIR DETAIL

N.T.S.

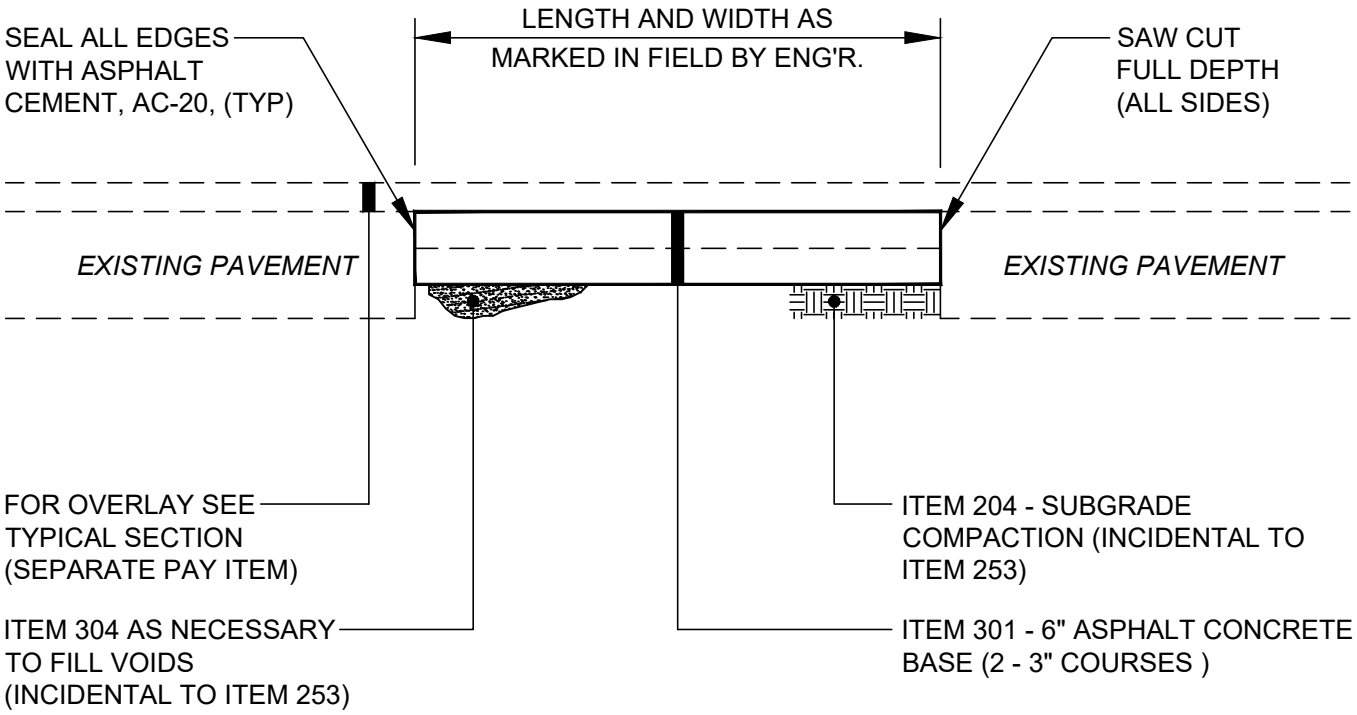

NOTES:

1.) A CONTINGENCY QUANTITY OF ITEM 253 - PAVEMENT REPAIR IS INCLUDED IN THE CONTRACT TO REPLACE ANY PAVEMENT / BASE AREAS AS REQUIRED PRIOR TO PAVING. THE CONTRACTOR SHALL REPAIR ONLY THOSE AREAS MARKED IN THE FIELD BY THE ENGINEER AFTER THE PLANING OPERATIONS.

2.) THE BASE REPAIR AREAS WILL BE MARKED BY THE ENGINEER PRIOR TO THE PLANING OPERATIONS TO OBTAIN INITIAL QUANTITIES AND AFTER THE PAVEMENT PLANING FOR THE FINAL AREAS TO BE REPAIRED.

ITEM 253 - PAVEMENT REPAIR DETAIL

N.T.S.

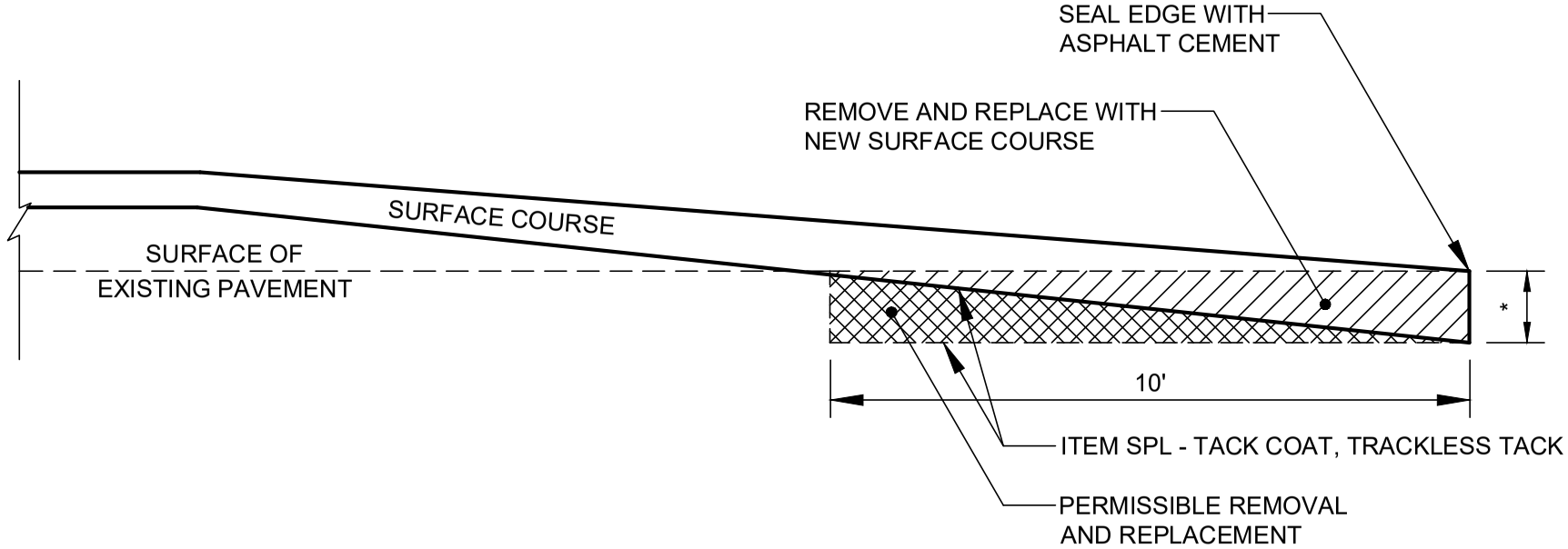

* REFER TO TYPICAL SECTION FOR PLANING DEPTHS.

* BUTT JOINT INCIDENTAL TO ASPHALT SURFACE COURSE.

ITEM 254 - PAVEMENT PLANING, ASPHALT CONCRETE

TYPICAL BUTT JOINT DETAIL

N.T.S.

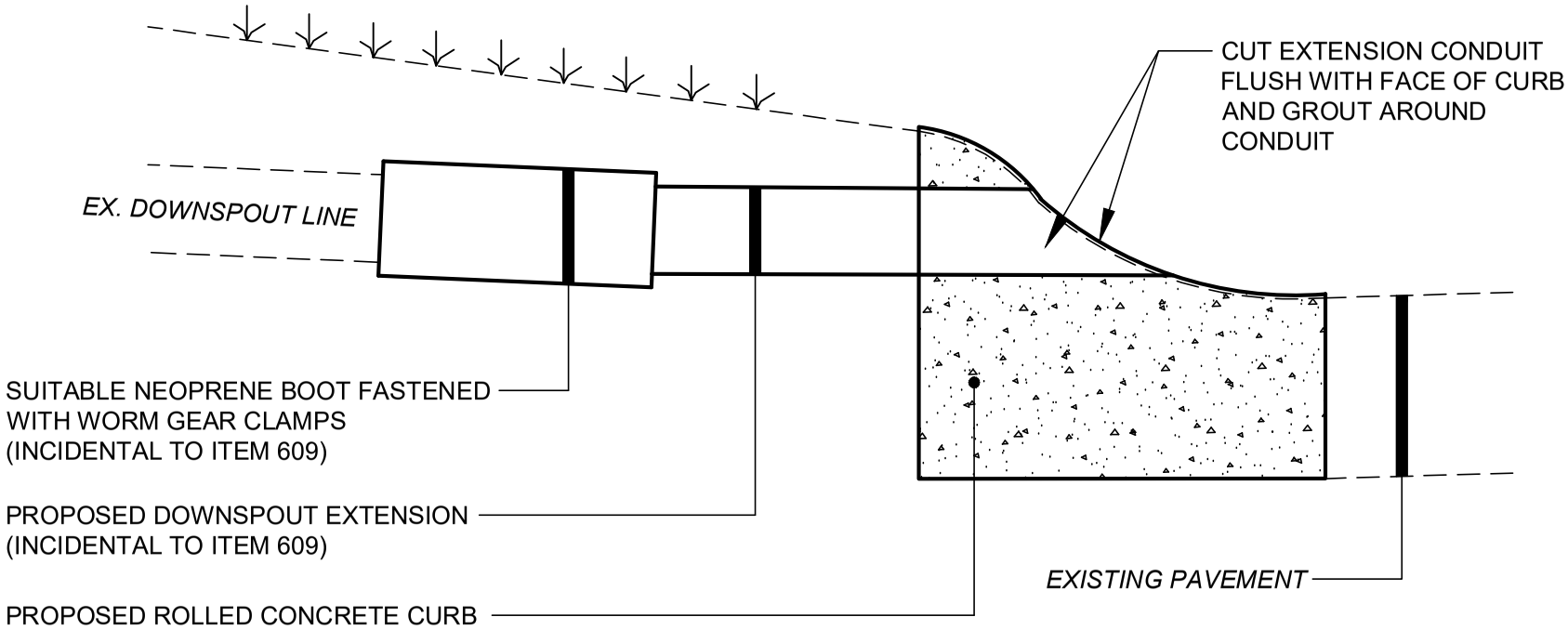

NOTES:

1.) 3" PVC PIPE SCH. 40, (SLOPED TO DRAIN) MAY BE CAST-IN-PLACE AT TIME OF CONSTRUCTION WITH 3" SLOT IN CURB. FOR INSTALLATION AFTER CURB IS CONSTRUCTED, THE CURB SLOT MUST BE SAW CUT (4.5" MAX. WIDTH) AND THE AREA FILLED WITH AN EPOXY CONCRETE. TYPE OF EPOXY CONCRETE TO BE APPROVED BY THE OWNER / ENGINEER BEFORE USED BY THE CONTRACTOR.

2.) THE COST FOR THE LABOR AND MATERIAL NECESSARY TO REPLACE THE DOWNSPOUT LEADER SHALL BE INCIDENTAL TO THE PERTINENT CURB REPLACEMENT ITEM FOR EACH DOWNSPOUT REPLACED THREE (3) FEET IN LENGTH. TOPSOIL AND SEEDING SHALL BE INCIDENTAL IN COSTS.

3.) IF AT THE DIRECTION OF THE ENGINEER, MORE THAN 3' OF DOWNSPOUT DRAIN NEEDS TO BE REPLACED, THE ADDITIONAL WORK SHALL BE PAID ON A PER FOOT BASIS UNDER ITEM 603 - 3" PVC PIPE SCH. 40. ANY NECESSARY VERTICAL OR HORIZONTAL BENDS SHALL BE INCLUDED AND PAID FOR ON THE ABOVE BASIS.

ITEM 603 - DOWN SPOUT EXTENSION DETAIL

N.T.S.

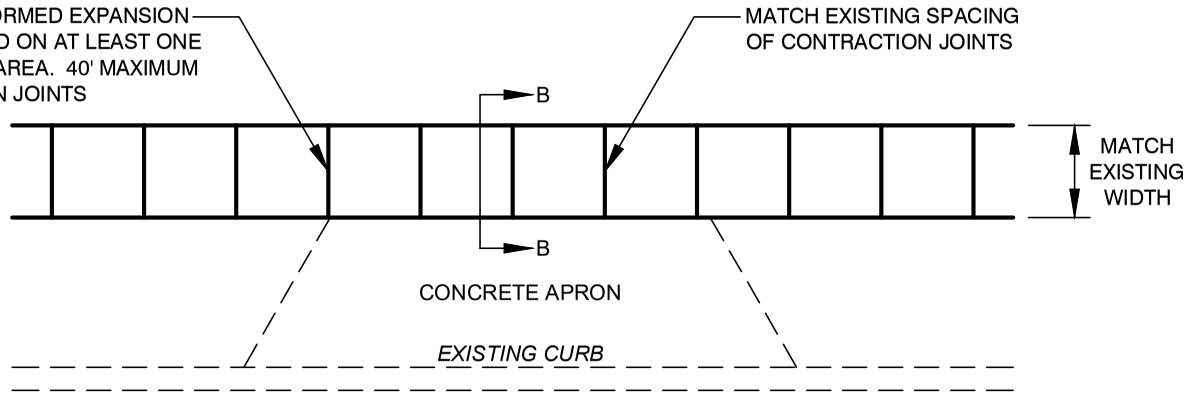

PLAN VIEW

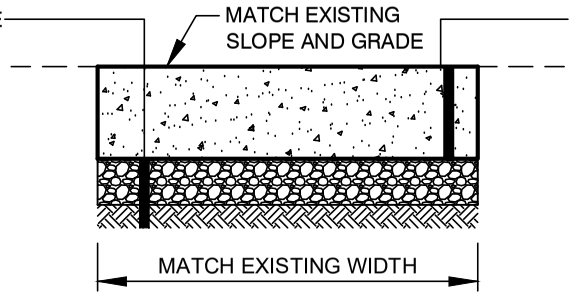

SECTION B-B

NOTES:

1.) THE CITY SHALL MARK IN THE FIELD THE WALK TO BE REPLACED, REPLACEMENT WALK SHALL MATCH THE LINE AND GRADE OF THE EXISTING WALK AND THE SAME JOINT PATTERN SHALL BE MAINTAINED. ITEM 705.03 - 1/2" PREFORMED EXPANSION JOINT MATERIAL SHALL BE PLACED ON AT LEAST ONE END OF THE REPAIRED AREA. ALL REPAIRS ARE TO BE MADE TO THE NEAREST JOINT. ANY DAMAGE TO ADJACENT WALK OR DRIVEWAY BY THE CONTRACTOR, THE COST SHALL BE INCURED BY THE CONTRACTOR.

2.) THE FINISH APPLIED TO THE CONCRETE WALK SHALL BE CONSISTENT WITH THE EXISTING WALK IT IS TO MATCH AND BE APPROVED BY THE CITY. ALL JOINTS AND OUTSIDE EDGES OF THE WALK SHALL BE TOOLED WITH AN EDGER OR JOINT TOOL AFTER BROOMING OR HAND FINISHING OF THE FINAL FINISH.

3.) THE REPLACEMENT SIDEWALK SHALL BE A MINIMUM THICKNESS OF 6" AT RESIDENTIAL APRONS AND A MINIMUM THICKNESS OF 9" AT COMMERCIAL APRONS.

4.) ALL DISTURBED YARD AREAS SHALL BE RESTORED TO GRADE, SEEDED, AND MULCHED BEFORE THE WORK IS APPROVED FOR PAYMENT AND SHALL BE INCIDENTAL TO ITEM 608 - SIDEWALK, REMOVE AND REPLACE.

ITEM 608 - CONCRETE SIDEWALK DETAIL

N.T.S.

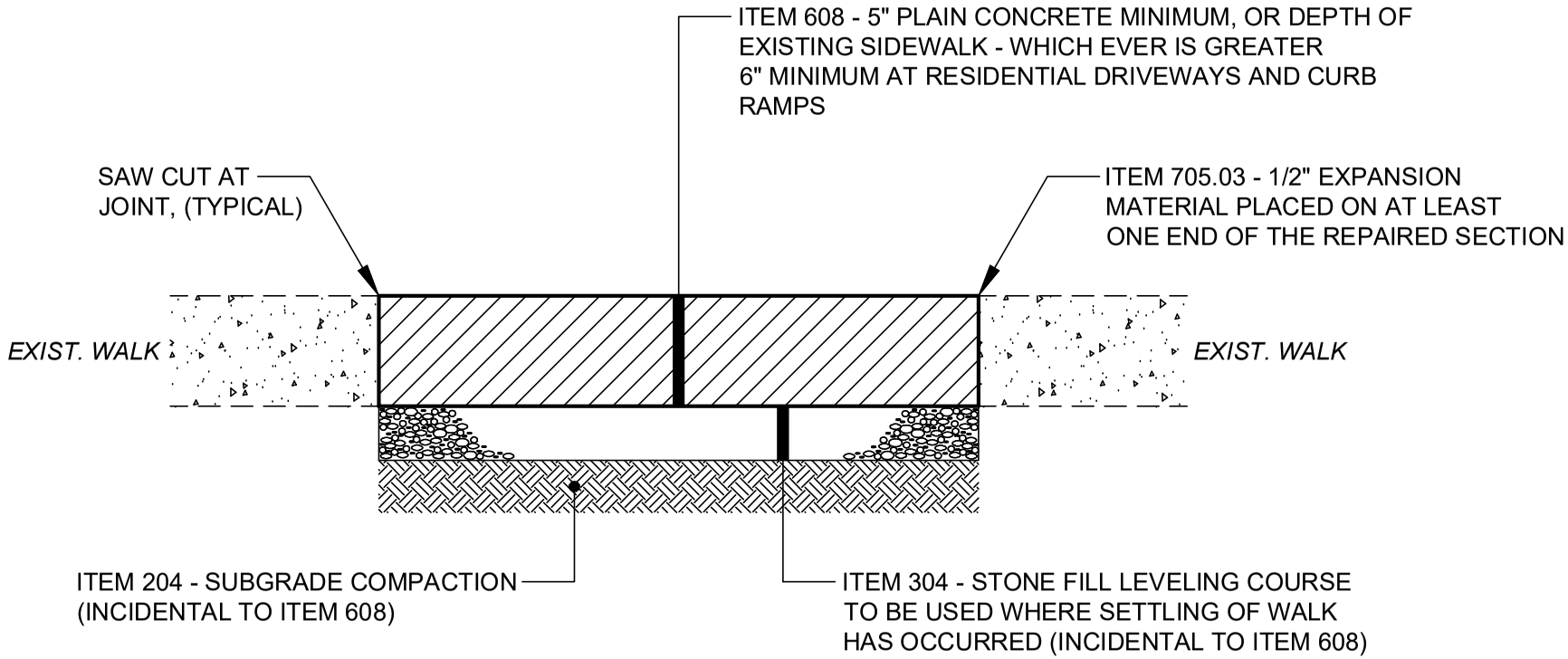

NOTES:

1.) REPLACEMENT WALK SHALL MATCH THE LINE AND GRADE OF THE EXISTING WALK AND THE SAME JOINT PATTERN SHALL BE MAINTAINED.

2.) DISTURBED YARD AREAS SHALL BE RESTORED TO GRADE, SEEDED AND MULCHED WHICH SHALL BE INCIDENTAL TO ITEM 608.

3.) EXPANSION MATERIAL SHALL BE PLACED WHERE THE NEW WALK MEETS THE EXISTING WALK AND ALONG THE BACK OF THE CURB WHERE THE NEW WALK IS ADJACENT TO THE CURB.

ITEM 608 - CONCRETE WALK SECTION

N.T.S.

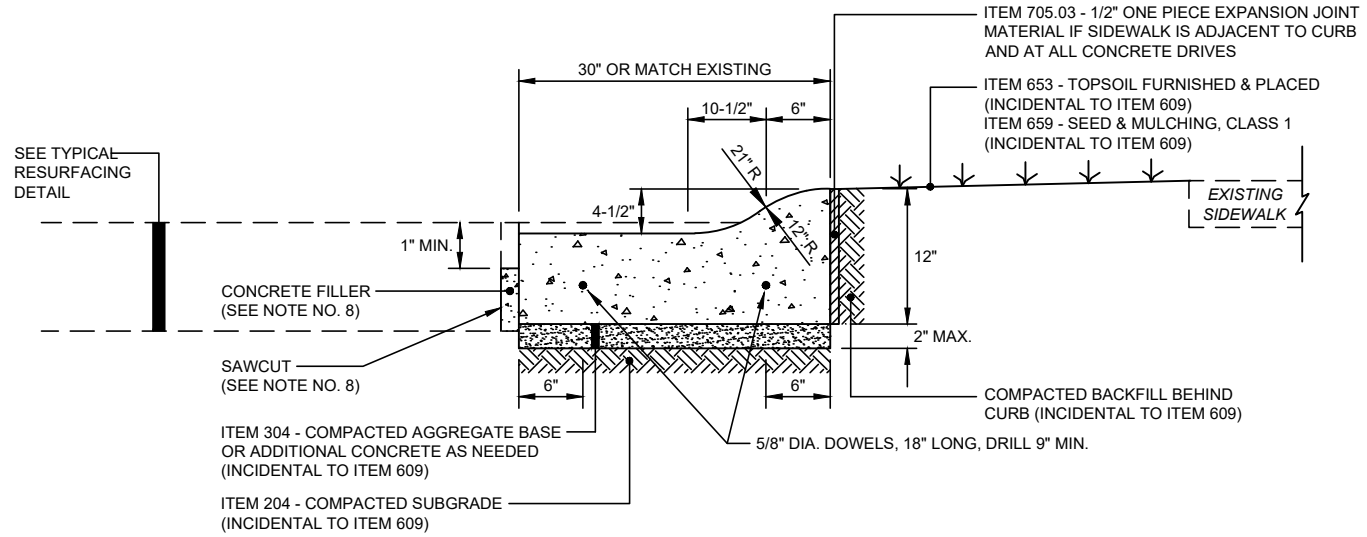

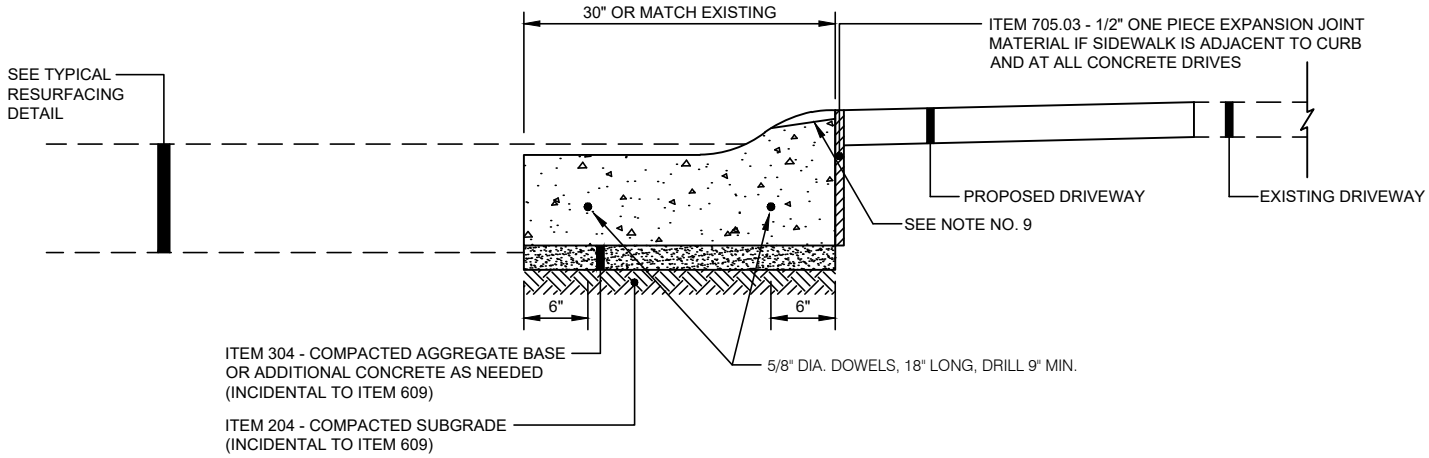

GENERAL NOTES:

1.) CONCRETE SHALL BE 4000 PSI @ 28 DAYS WITH 5% MIN. TO 8% MAX. ENTRAINED AIR.

2.) MAINTAIN SPACING OR EXISTING EXPANSION AND CONTRACTION JOINTS.

3.) THE COST OF ANY REQUIRED YARD RESTORATION WHICH WOULD INCLUDE TOPSOIL AND/OR SEEDING AND MULCHING SHALL BE INCIDENTAL TO ITEM 609, CONCRETE CURB AND GUTTER, REMOVE AND REPLACE.

4.) THE MIN. CURB AND GUTTER REPLACEMENT SHALL BE 3'-0" WITH EXPANSION MATERIAL AND DOWELS PLACED ON AT LEAST ONE END OF THE REPAIRED SECTION.

HAND FORMED CURB

5.) DOWELING WILL BE REQUIRED AT EXPANSION JOINTS IN THE NEW CURB. TWO DOWELS SHALL BE PLACED PER DETAIL. EXPANSION JOINTS SHALL BE PLACED:

A.) AT A MAXIMUM SPACING OF 40'.

B.) ONE FOOT ON EACH SIDE OF CATCH BASIN PER ODOT STANDARD DRAWINGS CB-3 AND CB-3A.

C.) ALL CURB RADII RETURNS AND AT ALL STOPS IN POURS.

D.) WHERE THE NEW CURB MEETS THE EXISTING CURB.

MACHINE FORMED CURB

6.) DOWELING WILL BE REQUIRED AT EXPANSION JOINTS IN THE NEW CURB. TWO DOWELS SHALL BE PLACED PER DETAIL. EXPANSION JOINTS SHALL BE PLACED:

A.) ONE FOOT ON EACH SIDE OF CATCH BASINS PER ODOT STANDARD DRAWINGS CB-3 AND CB-3A.

B.) ALL CURB RADII RETURNS AND AT ALL STOPS IN POURS.

C.) WHERE THE NEW CURB MEETS THE EXISTING CURB.

7.) THE DIMENSIIONS ABOVE MAY BE MODIFIED BY THE ENGINEER IN THE FIELD TO MATCH THE DIMENSIONS OF THE VARIOUS EXISTING CURBS TO BE REMOVED.

8.) TO BE USED WHERE NEW CURB DOES NOT MEET EXISTING PAVEMENT.

9.) DEPRESS CURB AS REQUIRED TO MATCH AND SAVE THE EXISTING APRON.

10.) IF THE CONTRACTOR BREAKS THE APRON WHILE INSTALLING THE CURB, HE SHALL REPLACE THE APRON TO 1' BEHIND THE CURB (FULL WIDTH OF APRON). THE COST SHALL BE INCIDENTAL TO ITEM 609.

11.) IF THE APRON WAS SPALLED BEFORE CONSTRUCTION, THE CONTRACTOR SHALL CLEAN AND PATCH THE APRON UP TO 1' BEHIND THE CURB IN ORDER TO PROVIDE A SMOOTH TRANSITION TO THE PROPOSED CURB. THE COST SHALL BE INCIDENTAL TO ITEM 609.

12.) WORK PERFORMED ON APRONS WHICH FALL APART AFTER THE CURB IS REMOVED DUE TO NO FAULT OF THE CONTRACTOR (PRE-EXISTING CONDITION) SHALL BE A SEPARATE PAY ITEM.

ITEM 609 - CURB, COMBINATION CURB & GUTTER REPLACEMENT DETAIL

N.T.S.

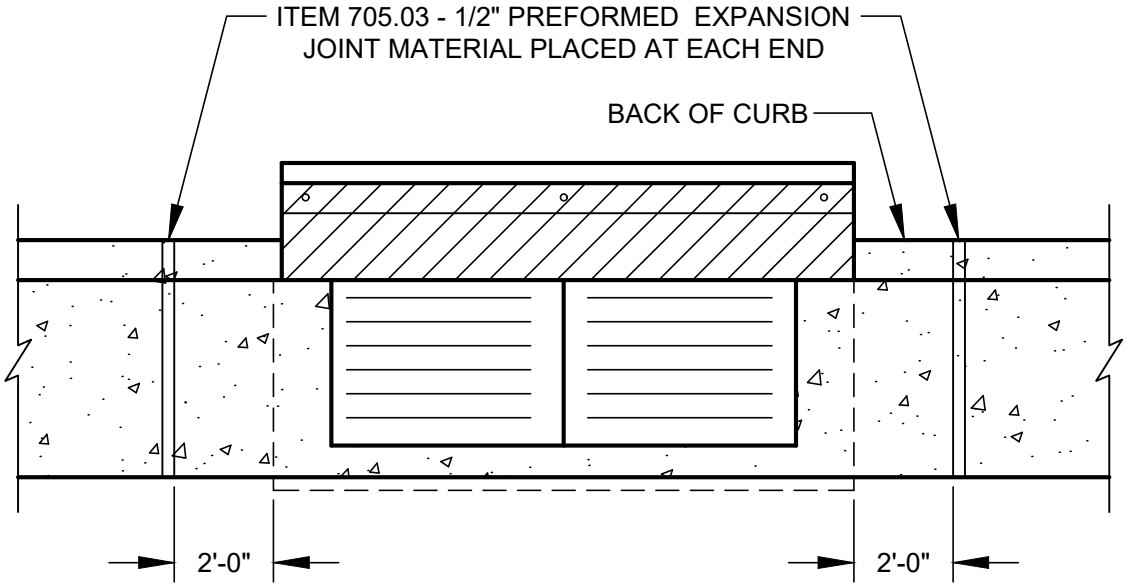

NOTES:

1.) SEE ODOT STANDARD DRAWINGS CB-3 & CB-3A

2.) CONCRETE CURB PAID AT THE LINEAR FOOT PRICE UNDER ITEM 609 COMBINATION CURB AND GUTTER, REMOVAL AND REPLACEMENT

ROLL CURB REPLACEMENT ADJACENT TO CATCH BASIN

N.T.S.